REV	Description	DATE	BY
v1.0	Changing CH340T into CP2102N	2019/12/20	Milo
v2.1	Changing temperatrure&humidity sensor	2021/5/12	zhihuai.zhou
v2.2	Add a solder bridge(JP2)	2022/2/17	Power Lin
v2.3	Change X1 crystal to the 12 pF load-capacitance version, and replace U12 from BMP280 to SPA06-003.	2025/08/12	wei.Xing

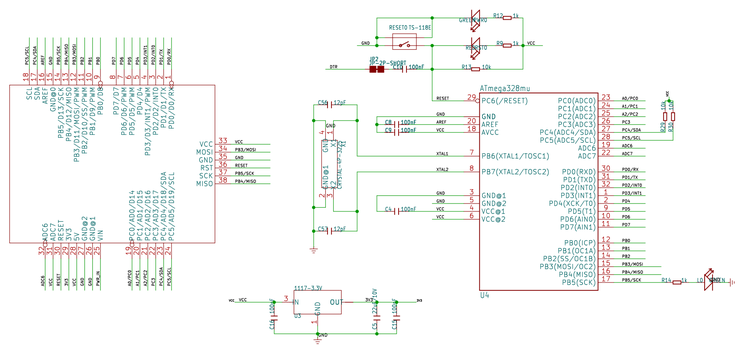

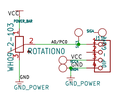

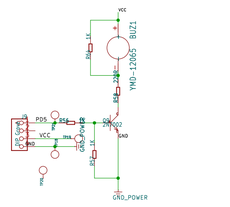

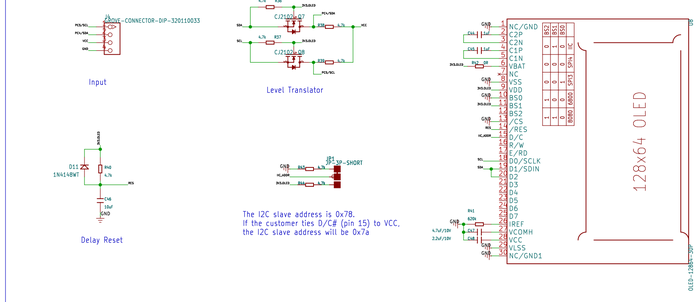

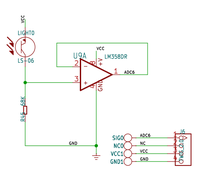

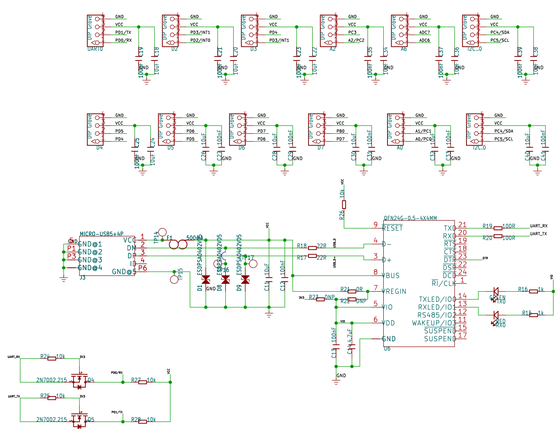

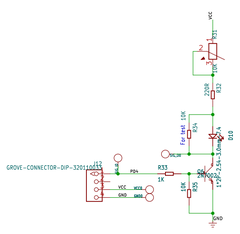

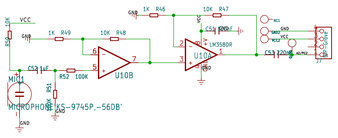

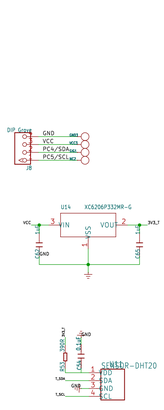

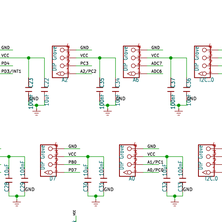

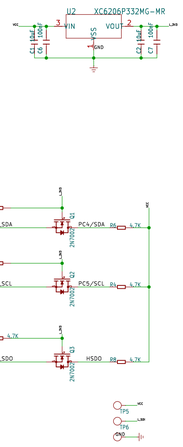

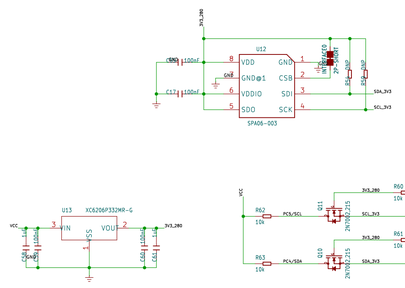

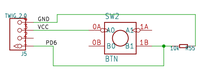

seeed studio

Sheet: /
File: Grove Beginner Kit for Arduino.kicad_sch

Title: Grove Beginner Kit for Arduino

Size: User	Date: 2025-08-12	Design:	CC BY-SA 4.0
KiCad E.D.A. 9.0.0			Rev: v2.3
			Id: 1/1